hergo®
56-01 55TH AVENUE
MASPETH, NY 11378
888.222.7270
www.hergo.com

13-00825-000
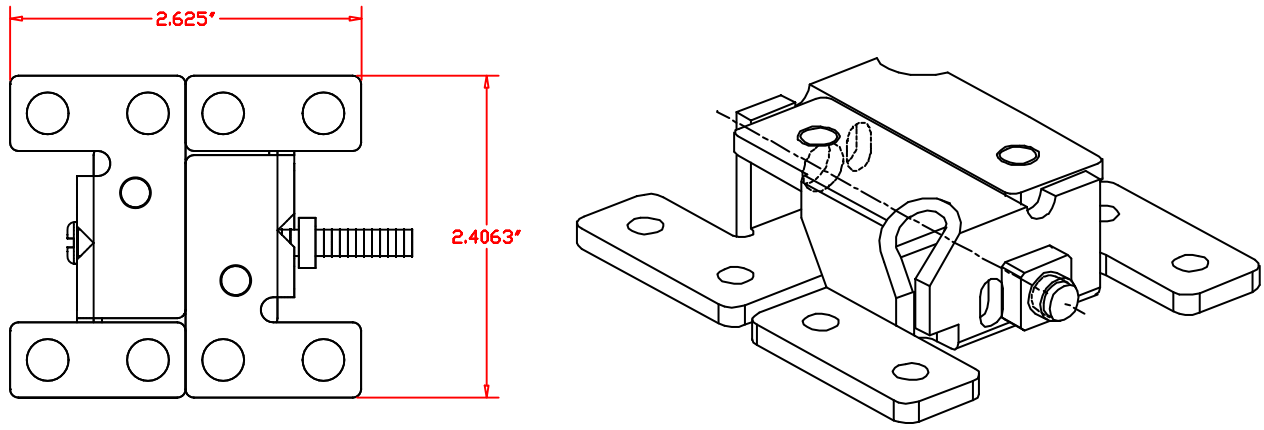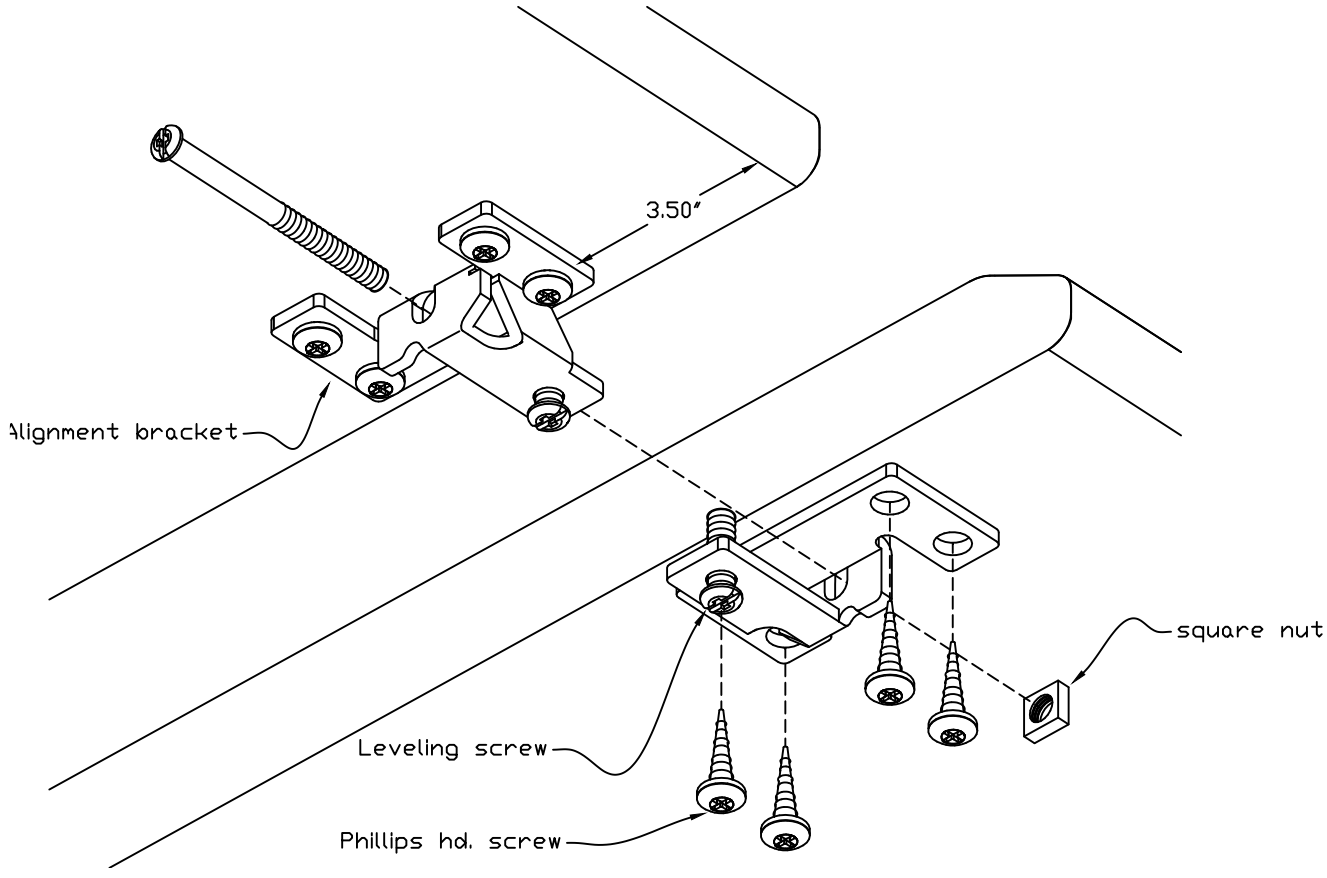
Desktop Joint Leveler